参考図

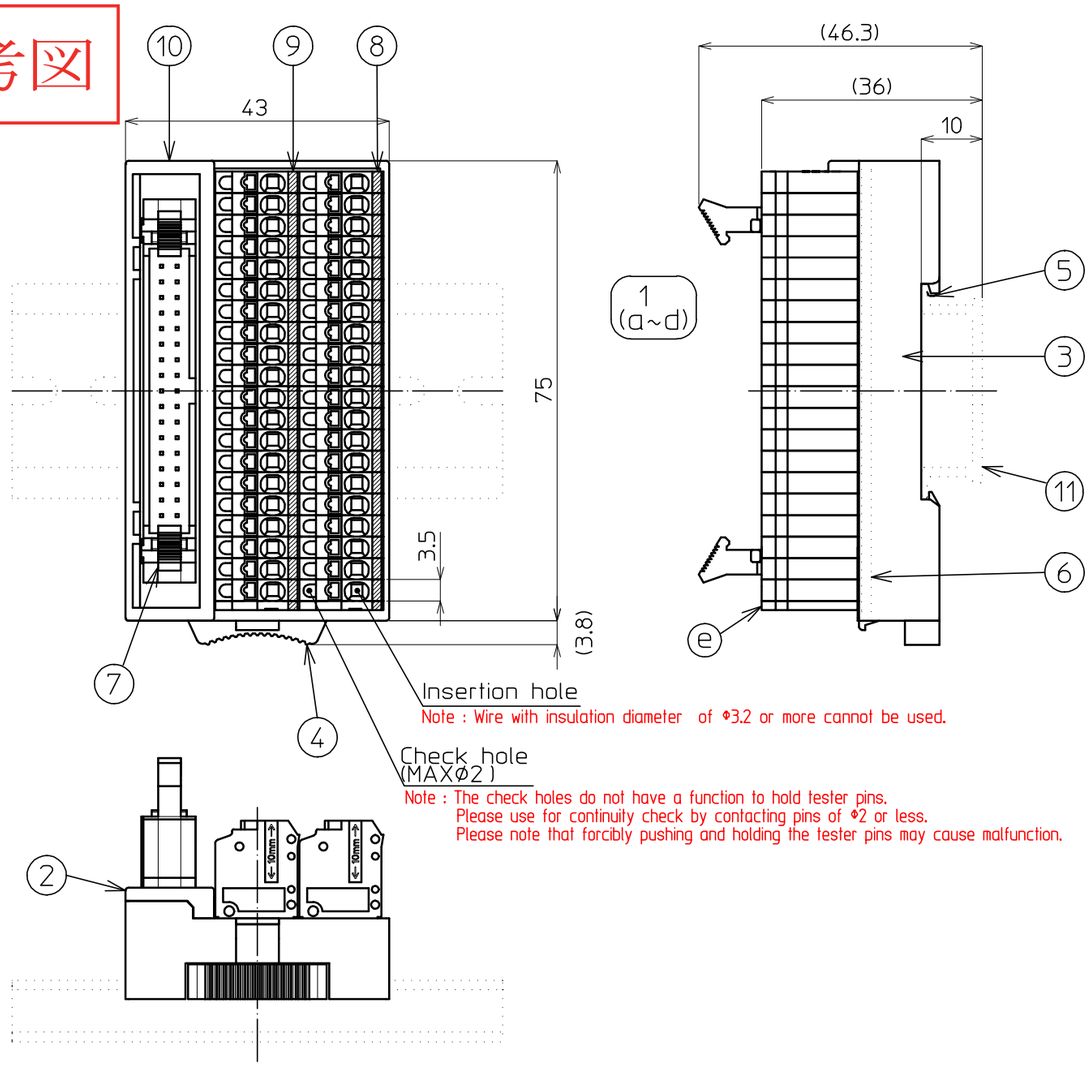

The contents of printing																				
	500	501	502	503	504	505	506	507	508	509	510	511	512	513	514	515	COM 1 (OUT)
	000	001	002	003	004	005	006	007	008	009	010	011	012	013	014	015	COM 0 (IN)
No.	⑨																⑧

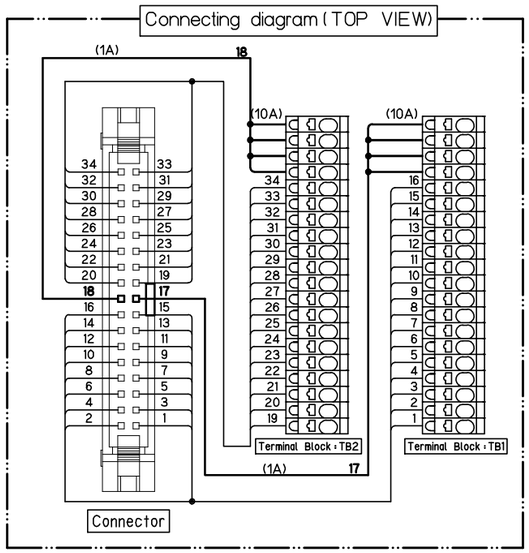

Specification

No.	Description	Material	Size	Surface Treatment	Remarks	Quantity
1	Terminal Block 20P					2
a	Base	66Nylon(Glay)			UL94V-0	20set
b	Conductive Plate	Copper alloy		Sn		
c	Button	66Nylon(Orange)			UL94V-0	
d	Connecting Spring	SUS				
e	Side Plate	66Nylon(Glay)			UL94V-0	1
2	Upper case	PBT (Ivory)			UL94V-0	1
3	Lower case	PBT (Ivory)			UL94V-0	1
4	Lock button	POM (yellow)				1
5	Spring	SUS				1
6	Substrate	Glass epoxy	t=1.6			1
7	Connector				HIROSE : HIF3BA-34PA-2.54DSA(63)	1
8	Name seal TB1					1
9	Name seal TB2					1
10	Seal of form					1
11	Rail DIN35mm				※ Optional	1

Rateds

Rating voltage		125V
Rating current		1A
Insulation resistance		100MΩ or above (With DC500V)
Withstand voltage		AC500V / 1minute
Connectable wire	Pressure terminal	0.14mm²~ 0.75mm² / AWG26~AWG18 Conformity DIN46228-4 8~12mm
	Single	Φ0.3~Φ1.3 9~10mm CABLE
	Twist	0.08mm² ~ 1.5mm² / MAX AWG28~AWG16 9~10mm CABLE
Operating ambient temperature		-15℃~+60℃(No freezing or condensation)
Relative humidity		45~85%

※Solid/Stranded wires with insulation of Φ3.2 or more cannot be used.

Weight	約82g

How to move the unit attached to the DIN (35-mm width) rail

This unit is the structure which is fixable to a rail without using a stopper.
When moving the unit fixed to the rail, it can move by pushing the button① of a figure.

①Rock button continues pushing.
②A unit can be moved.

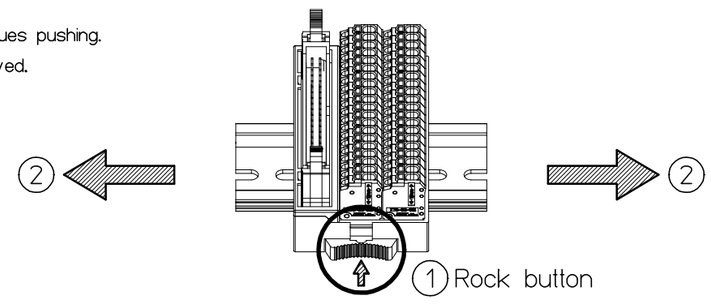

⚠ Since a rail may be damaged when moved without pushing a lock button, please be careful of movement of a unit.

改番 REV.	訂正記事 DESCRIPTION OF REVISION	年月日 DATE	担当 BY

	承認 APPROVED	検図 CHECKED	製図 DRAWNG	設計 DESIGNED	名称 TITLE
	菅沼 2015/12/11	小松 2015/12/11	宮澤		PCXV-1H34-TB40-K-Nano Specifications
製品コード CODE No.			単位 UNIT mm	尺度 SCALE 1/1	
東洋技研株式会社 TOYOGIKEN CO.,LTD.			公差 TOLERANCE		図番 DRAWNG No. TA15345-01 REV. SHEET 1/1