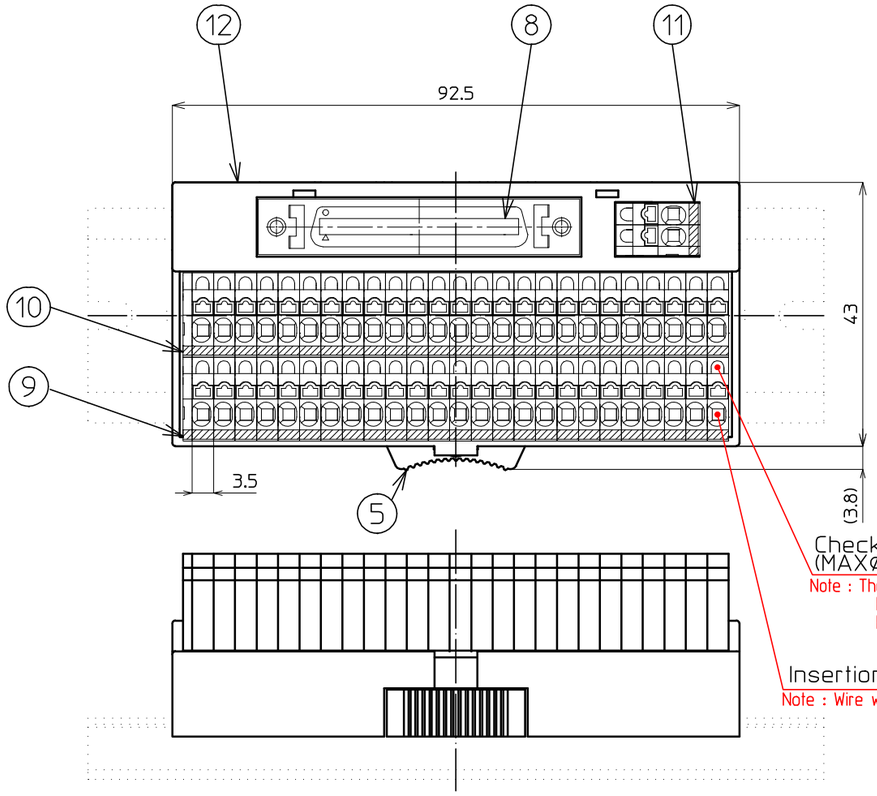

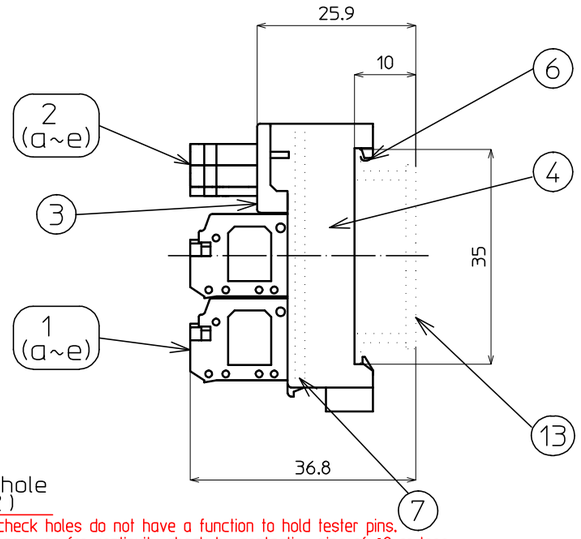

Check hole
(MAXΦ2)
Note : The check holes do not have a function to hold tester pins.
Please use for continuity check by contacting pins of Φ2 or less.
Please note that forcibly pushing and holding the tester pins may cause malfunction.

Insertion hole
Note : Wire with insulation diameter of Φ3.2 or more cannot be used.

参考図

Connecting diagram (TOP VIEW)

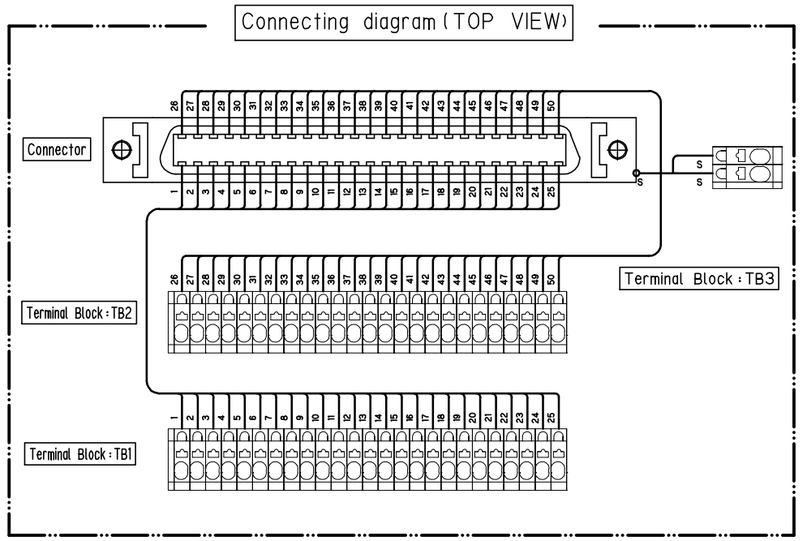

No.	The contents of printing
10	26 27 28 29 30 31 32 33 34 35 36 37 38 39 40 41 42 43 44 45 46 47 48 49 50
9	1 2 3 4 5 6 7 8 9 10 11 12 13 14 15 16 17 18 19 20 21 22 23 24 25

No.	The contents of printing
11	S S

Specification

No.	Description	Material	Size	Surface Treatment	Remarks	Quantity
1	Terminal Block 25P					2
a	Base	66Nylon(Gray)			UL94V-0	25set
b	Conductive Plate	Copper alloy		Sn		
c	Button	66Nylon(Orange)			UL94V-0	
d	Connecting Spring	SUS				
e	Side Plate	66Nylon(Gray)			UL94V-0	1
2	Terminal Block 2P					1
a	Base	66Nylon(Gray)			UL94V-0	2set
b	Conductive Plate	Copper alloy		Sn		
c	Button	66Nylon(Green)			UL94V-0	
d	Connecting Spring	SUS				
e	Side Plate	66Nylon(Gray)			UL94V-0	1
3	Upper case	PBT (Ivory)			UL94V-0	1
4	Lower case	PBT (Ivory)			UL94V-0	1
5	Lock button	POM (yellow)				1
6	Spring	SUS				1
7	Substrate	Glass epoxy	t=1.6			1
8	Connector				3M : 10250-6202-PL	1
9	Name seal TB1					1
10	Name seal TB2					1
11	Name seal TB3					1
12	Seal of form					1
13	Rail DIN35mm				※ Optional	1

Rateds

Rating voltage		50V
Rating current		0.5A
Insulation resistance		100MΩ or above (With DC500V)
Withstand voltage		AC500V / 1minute
Connectable wire	Pressure terminal	0.14mm²~ 0.75mm² / AWG26~AWG18 Conformity DIN46228-4 8~12mm
	Single	Φ0.3~Φ1.3 9~10mm CABLE
	Twist	0.08mm² ~ 1.5mm² / MAX AWG28~AWG16 9~10mm CABLE
Operating ambient temperature		-15℃~+60℃(No freezing or condensation)
Relative humidity		45~85%

※Solid/Stranded wires with insulation of Φ3.2 or more cannot be used.

Weight	104g

How to move the unit attached to the DIN (35-mm width) rail

This unit is the structure which is fixable to a rail without using a stopper.
When moving the unit fixed to the rail, it can move by pushing the button① of a figure.

① Rock button continues pushing.
② A unit can be moved.

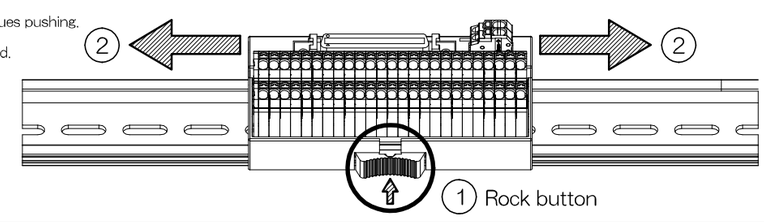

⚠ Since a rail may be damaged when moved without pushing a lock button, please be careful of movement of a unit.

改番 REV.	訂正記事 DESCRIPTION OF REVISION	年月日 DATE	担当 BY
△			

承認 APPROVED	検図 CHECKED	製図 DRAWNG	設計 DESIGNED	名称 TITLE
菅沼 2013. 2/12	小松 2013. 2/12	宮澤		PCX-10S50 Specifications
製品コード CODE No.		単位 UNIT mm	尺度 SCALE 1/1	
東洋技研株式会社 TOYOGIKEN CO.,LTD.		公差 TOLERANCE		図番 DRAWNG No. TA13107-01 REV. △ SHEET 1/1