参考図

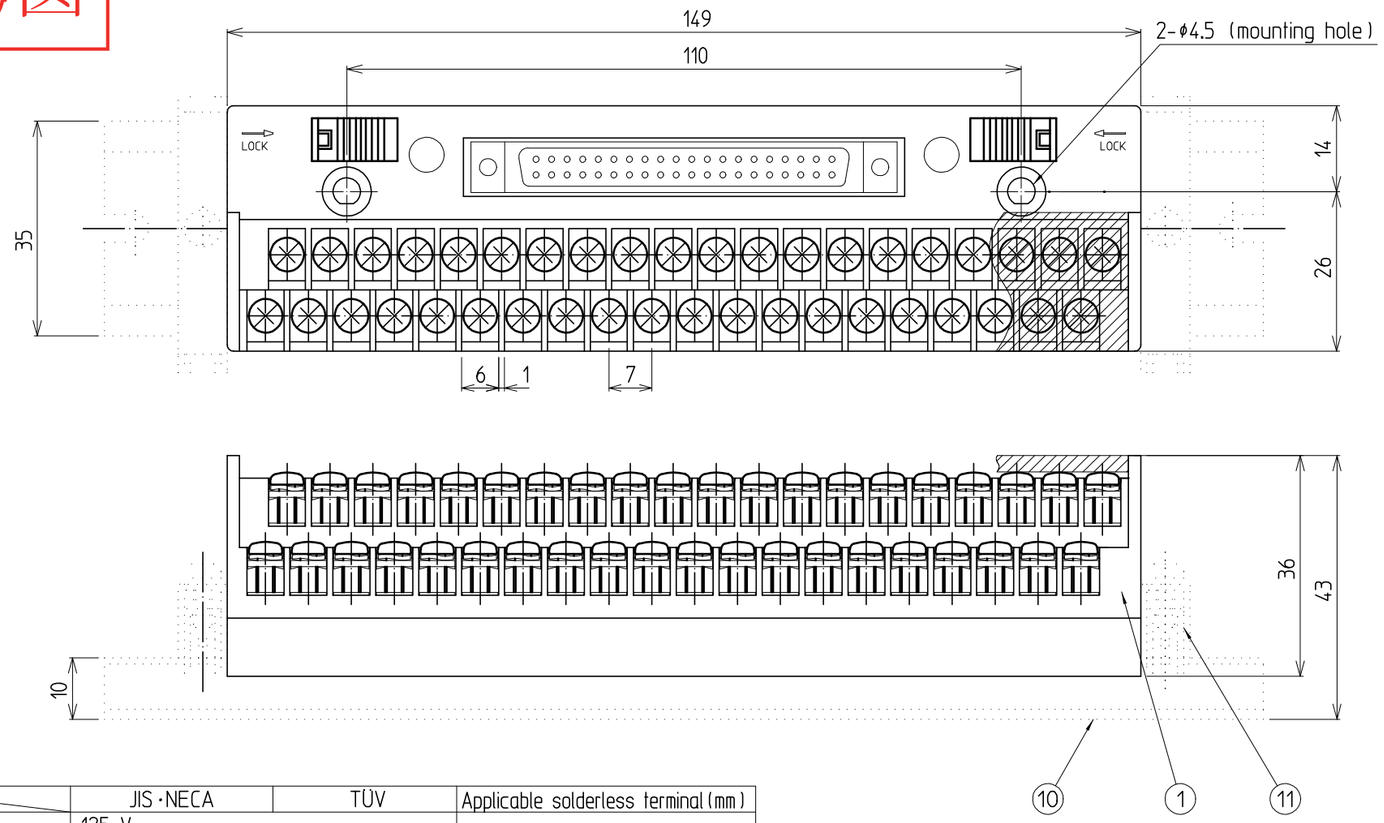

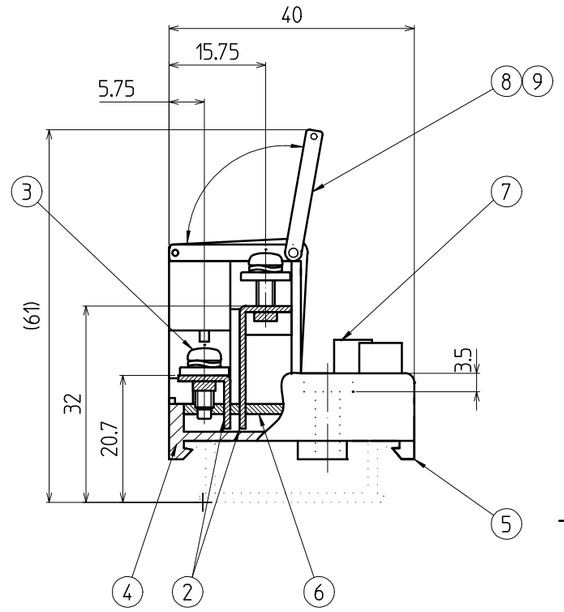

Rateds ⚠

	JIS・NECA	TÜV	Applicable solderless terminal (mm)
Rating voltage	125 V		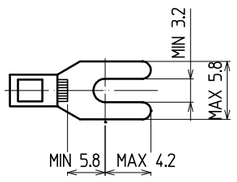
Rating current	1A		
Connectable wire	1.25 mm²/MAX	AWG22~16	
Insulation resistance	100MΩ or above (With DC500V)		
Withstand voltage	AC600V / 1minute		
Standard tightening torque	1.2N・m		
Operating ambient temperature	-15℃~+60℃(No freezing or condensation)		
Standard	JIS C 8201-7-1 NECA C 2811	EN60947-7-1	

Specificactions

No	Discription	Material	Size	Surface treatment	Remarks
1	Terminal Block	Modified PPE (Gray)			UL94V-0
2	Conductive Plate A,B	Brass	t=1	Sn	
3	Connection screw	Steel	M3X9.5L	Ni	±Free terminal screw with spring
4	Under case	Modified PPE (Gray)			UL94V-0
5	Rail latch	Acetal copolymer (yellow)			
6	Substrate	Glass-epoxy	t=1.6		
7	Connector				1747053-1/TE Connectivity ⚠
8	Cover	Polycarbonate			
9	Name Plate	Paper			
(10)	Mounting Rail	Aluminum			DAV,DAS ※ Optional
(11)	Stopper	Steel		Zi+Trivalent chromate conversion treatment	HDV-1 ※ Optional

Name Plate

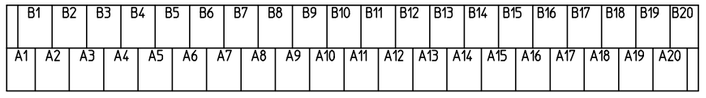

Connecting Diagram (Top View)

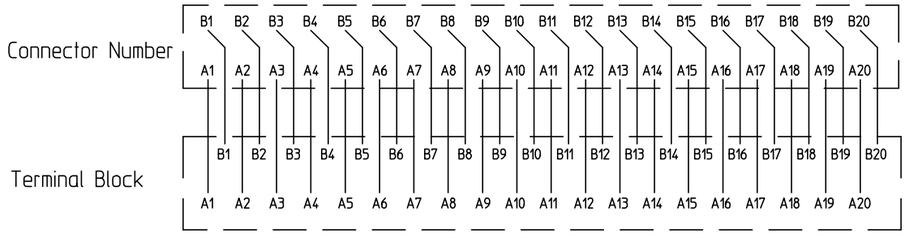

改番 REV.	訂正記事 DESCRIPTION OF REVISION	年月日 DATE	担当 BY
1	Connector changed (FCN-364P040-AU: Fujitsu Component → 1747053-1: TE Connectivity)	2023/9/13	Furukori

承認 APPROVED	検図 CHECKED	製図 DRAWNG	設計 DESIGNED
菅沼 2023/10/16	中村 2023/10/13	渡辺	

TOYOGIKEN
東洋技研株式会社
TOYOGIKEN CO.,LTD.

複写サイズ	単位 UNIT	尺度 SCALE
A3	mm	1:1

公差 TOLERANCE

名称 TITLE: PCN7-4F40

外観寸法図

図番 DRAWNG No.: TA12326-01

REV. 1 SHEET 1/1